Vibro Helmet

❖ AIM:

➢ **Problem**:

Nowadays, we are using helmets not in the proper way. Just for the law or for the sake of urgency, we wear helmets even without locking the belts. It may lead to fatal loss which can't be replaced ever.

➢ **Solution:**

To avoid such carelessness, my invention forces the user of the helmet to lock the belt properly.

❖ ABOUT MY PROJECT:

➢ **Materials used:**

❖ Arduino UNO

❖ Helmet

❖ Switch

❖ Wires

❖ Vibrating Motor

❖ Magnetic Door Lock Sensor

❖ 9V Battery

- **Explanation:**

In my project when the belt is not locked, the magnetic door lock sensor in the belt will not experience any attraction. The Arduino gets this information and it powers the vibration motor. When we lock the belt, the vibration motor stops the vibration. So, the belt needs to be locked always.

- **Principle:**

I used a microcontroller called Arduino to control the whole function. To code Arduino, I utilised the software called **Arduino IDE.** In Arduino IDE I used the **embedded C** program. I used a **9V** battery to power it.

- **Circuit Diagram:**

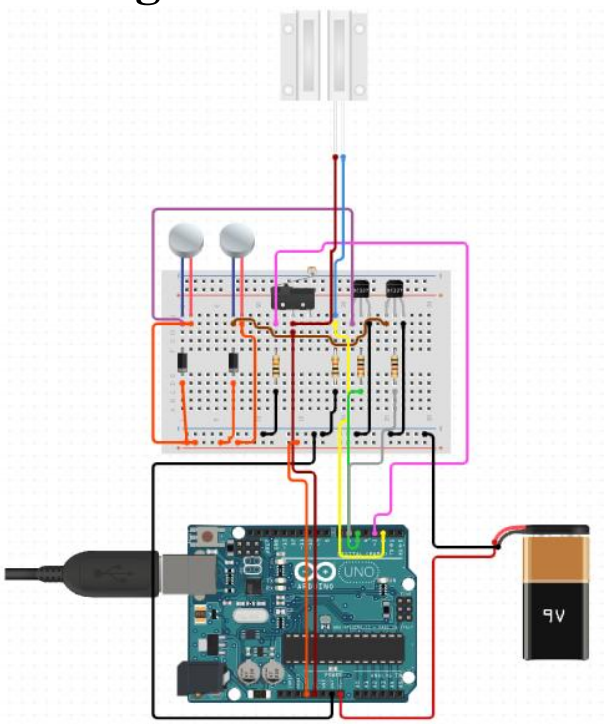

❖CONCLUSION:

Mainly I did this project intending to save lives which may lost due to the carelessness of riders.

WEAR VIBRO HELMET, SAVE LIFE